Reasons Behind Program Delays

Summary

- Program delays are common; the reasons behind the delays are varied
  - Problems conducting the test
    - Test range availability, test instrumentation problems, and test execution problems
  - Performance problems in DT or OT
    - System problems identified during testing that must be addressed
  - Programmatic
    - Funding or scheduling problems
  - Manufacturing
    - Manufacturing delays or quality control problems

Summary Results: Air and Naval Warfare

Program	Delay	Problems in Conducting Test	Performance Problems in DT	Performance Problems in OT	Programmatic	Manufacturing
Air Warfare						
Joint Strike Fighter	FRP delayed 3 years				X	X
P-8A Poseidon	MS C delayed 18 months	X				X
AIM-9X 8.212	OT completion delayed 18 months		X	X		
AARGM	FRP delayed over 2 years		X	X		X
CIRCM	FRP delayed 4 years		X			
IDECM Block 3	FRP delayed 5 years		X	X		
LAIRCM Phase II	FRP delayed over 4 years		X		X	
SIRFC	FRP delayed over a year		X	X		
AOC-WS 10.1	Fielding delayed one quarter		X			
MIDS JTRS	FRP delayed about a year		X	X		
Mark XIIA Mode 5	FRPD delayed 3 years		X	X		
DoN LAIRCM	MS C delayed a year			X	X	
MALD	IOT&E delayed over 3 years	X	X	X		
Naval Warfare						
RMS	FRP delayed 9 years		X	X	X	
ALMDS	FRP delayed 4 years		X			
MH-60S Block 2A AMCM	FRP delayed over 4 years		X	X		
AMNS	FRP slipped over 6 years		X			
LPD 17	MS III delayed 3 years	X				X
SM-6	FRP delayed a year		X			
LCS	FOC delayed a year				X	X
Virginia	MS III delayed 2 years	X	X	X	X	
DDG 1000	MS B rescinded				X	

Summary Results: Land, Net-Centric, and Missile Defense

Program	Delay	Problems in Conducting Test	Performance Problems in DT	Performance Problems in OT	Programmatic	Manufacturing
Land Warfare						
CH-47F	FRP delayed 3 years		X	X	X	
AH-1Z	FRP delayed over 4 years			X		
VTUAV	IOT&E delayed 3 years		X			
Spider Networked Munition	FRP delayed 6 years			X		
Precision Guidance Kit (PGK)	MS C delayed 4 years		X			
Excalibur Increment Ia-2	FRP delayed over 2 years		X		X	
PIM	MS C delayed 3 years				X	
JLTV	MS C delayed over 2 years		X		X	
E-IBCT	3 of 5 systems cancelled		X	X		
JTRS HMS Rifleman Radio	MS C, FRP delayed 2 years		X	X		
Gray Eagle	FRP delayed over 2 years			X	X	
Stryker MGS	FRP delayed over 3 years			X	X	
Net-Centric						
Net-Centric Enterprise Services	FRP delayed 2 years			X		
NPOESS	FRP delayed 2 years		X		X	
GCCS JOPES 4.2 and 4.2.1	Fielding delayed 2 years		X	X		
CITS AFNet Increment 1	Fielding delayed 2 years		X	X		
Missile Defense						
Patriot PAC-3	FRP delayed 15 years			X	X	
MEADS	LRIP delayed 9 years		X		X	

Conclusions

- Problems in conducting tests occasionally contributed to program delays, but problems found during both DT and OT testing frequently cause program delays
- Programmatic problems were also common

Outline

- Air Warfare Examples
- Naval Warfare Examples
- Land Warfare Examples
- Net-Centric Examples
- Missile Defense Examples

Joint Strike Fighter (F-35)

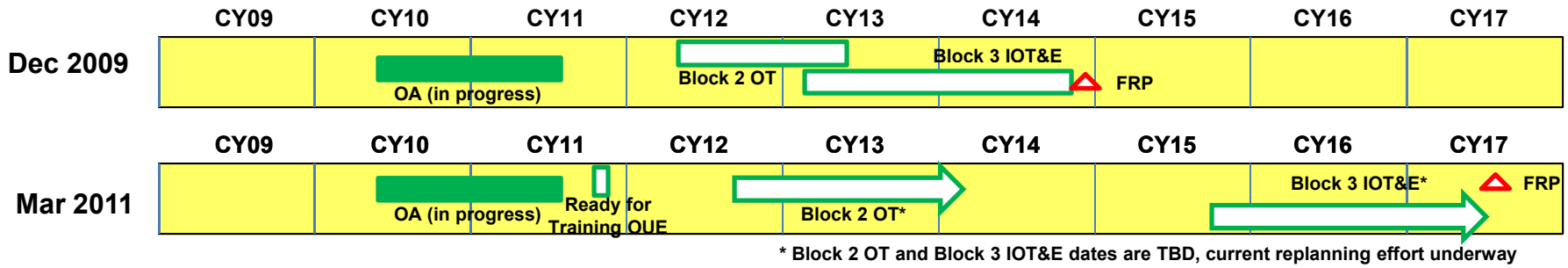

- **SDD and key program milestones have been extended three times from the baseline dates in the current TEMP (approved Dec 2009)**
- **Feb 2010 Restructuring:**
  - **Causes: delayed delivery of test aircraft due to extended manufacturing time, unrealistic planning assumptions for flight test progression, inadequate contractor staffing levels, insufficient software and integration lab facilities**
  - **Impacts: extend SDD 13 months, move MS C to Nov 2015, lower production ramp (122 fewer aircraft procured in FY11-15 compared to FY10 PB baseline)**
- **Nunn-McCurdy Recertification:**
  - **Process validated Joint Estimating Team cost and schedule models, endorsing need for further schedule slip**
  - **Late ferry dates of test aircraft (209 days total for first six SDD aircraft) and slow progress in STOVL flight sciences highlighted**
  - **Impacts: SDD completion moved to FY16**
- **Secretary of Defense FY12 Budget Decisions – based on Technical Baseline Review**
  - **Immaturity of STOVL design and unexpected component deficiencies inhibited DT progress**
  - **Development of missions systems software continues to lag program schedule, forcing delays in DT**
  - **Fly rates per month lowered to more realistic projections (from 12 max for all variants and venues to 10 max for CTOL/CV flight sciences, 9 max for STOVL flight sciences, 8 max for all mission systems); increased planning factors for re-fly and regression (up 15% for flight science, 10% for mission systems); more time required for software development and incremental builds**

Proposed Test Event | **Completed Test Event** | **Proposed Decision Point** | **Completed Decision Point**

P-8A Poseidon

"Multi-mission Maritime Aircraft, replacement for P-3"

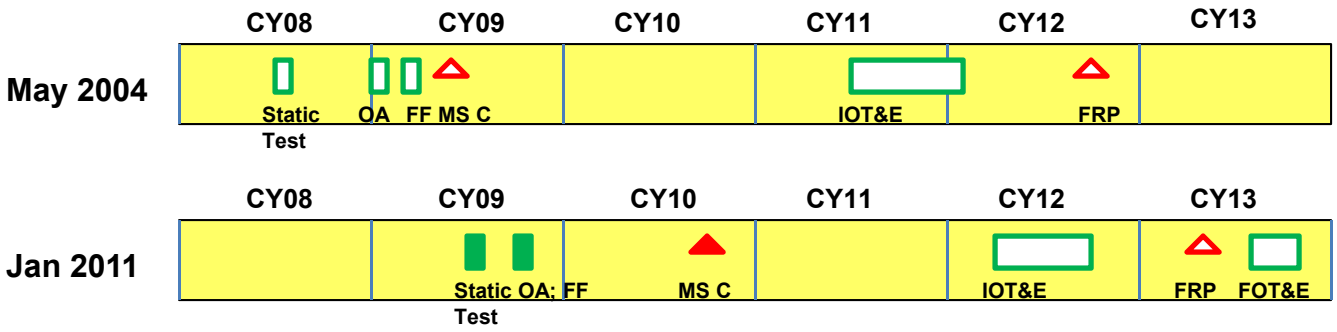

- **FY09 MS C was delayed 18 months for the reasons listed below**
- **First flight (FF) and the start of developmental flight testing was delayed by 10 months due to delays in completing the aircraft design drawings and building the test aircraft**
- **During developmental flight testing, problems with instrumentation in the airworthiness flight test aircraft (T-1) caused additional delays and reduced the number of completed flights prior to original MS C**
  - **Flight tests on the mission systems (T-2) and weapons drop (T-3) test aircraft also were delayed**
- **Boeing, the prime contractor, underestimated the complexities and time required for the static load testing, which delayed the start of testing by 12 months and extended testing by 7 months**
  - **In static load testing, improper loading of some aircraft components caused premature failure and a need to re-test**

AIM-9X 8.212 Software Upgrade

"Sidewinder Missile"

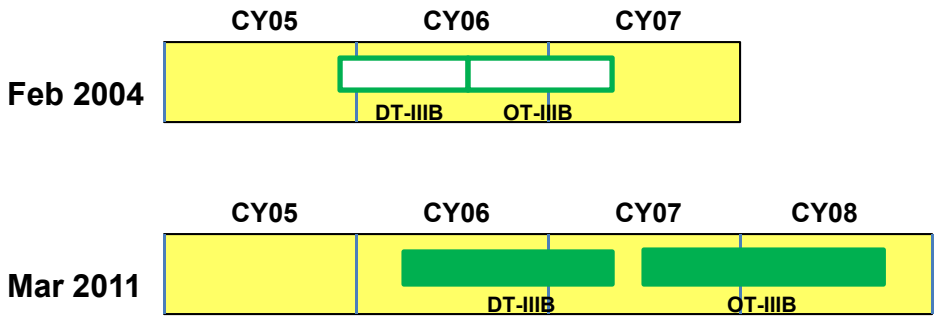

- **OT completion was delayed about 18 months for the reasons outlined below**
- **In DT, two areas caused additional program effort**
  - Surface Attack – an attempt to develop a residual capability against moving ground vehicles added testing, in the end, the program office did not certify the capability for OT
  - Lock-On After Launch capability was tested in both DT and OT. However, it was not certified for warfighter use because of fratricide concerns
- **In OT, the program had two software problems that led to an 11 month pause in OT**
  - One software problem caused an unexpected reduction in acquisition range relative to earlier versions
  - One software problem was a near-divide-by-zero that produced wild initial missile motion and created a safety of flight problem with the F-16
- **Both OT problems were fixed, and 8.212 was fielded after OT-III B**
  - Lock-On After Launch is currently planned for OT in version 9.3

Proposed Test Event | Completed Test Event | Proposed Decision Point | Completed Decision Point

Advanced Anti-Radiation Guided Missile (AARGM)

"A dual-mode guidance section on a HARM airframe"

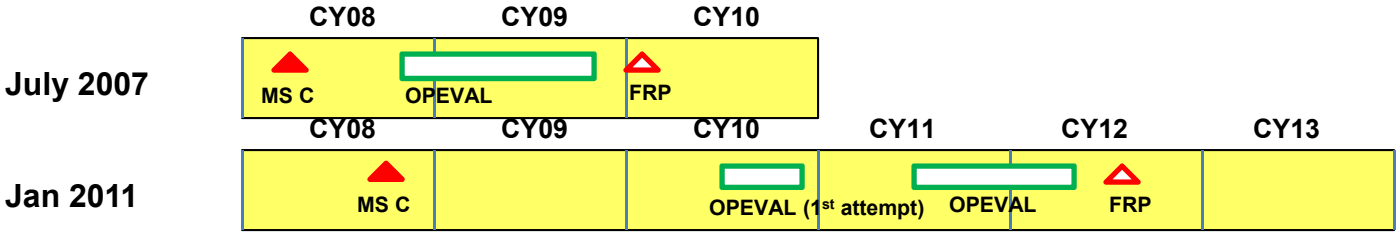

- **Schedule delays were due to several factors:**
  - Problems discovered during system development phase led to changes in missile subsystem designs
  - Sub-tier supplier quality control problems led to delays of 6 months to 1 year, and in a few instances led to qualifying new sub-tier suppliers (delays up to 1 year)
  - Delays in validating targets led to a slowdown in engineering tests and DT
  - Test aircraft availability and test range scheduling also introduced lesser program delays
- **Discovery of problems in DT and in operational assessment (OA) was limited by a reduction in scope of test (in part due to known deficiencies in the missile system)**
- **OPEVAL deferred to fix known problems and system deficiencies discovered mostly in engineering tests and to a lesser extent by problems discovered in DT and OA**
- **1st OPEVAL terminated early because of the discovery/occurrence of eight anomalies and the scoring of seven Operational Mission Failures (OMF) in a 3-month period (Jun-Aug 2010); in large part the result of reliability problems and system deficiencies**

Proposed Test Event | Completed Test Event | Proposed Decision Point | Completed Decision Point

Common Infrared Countermeasure (CIRCM)

"Countermeasures against IR-guided missile threats"

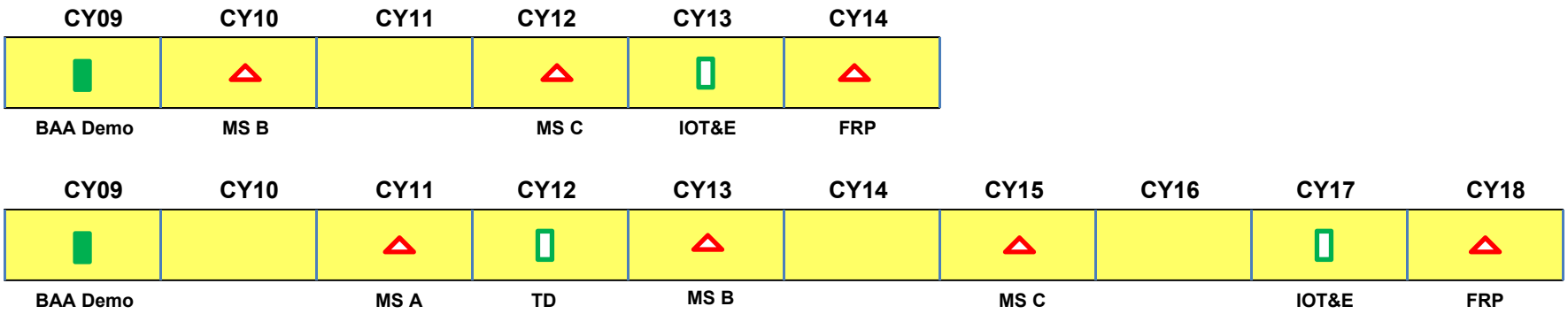

- **The Broad Area Announcement (BAA) Demonstration Test in 2009 was originally planned to:**
  - **Demonstrate mature technologies (TRL 6) for fiber optic transmission of jamming laser energy and a small and lightweight pointing and tracking system suitable for application on helicopters**
  - **Provide test results to inform an MS B and down-select decision in 2010**
- **The BAA Demonstration proved that the technologies were not mature**
- **OSD decided that a formal MS A and Technology Development (TD) Phase was required**
- **The outcome of the initial BAA Demonstration Test has delayed the FRP four years due to the lack of proven technology**

Integrated Defensive Electronic Countermeasures

"RF countermeasures suite for Navy F/A-18 aircraft"

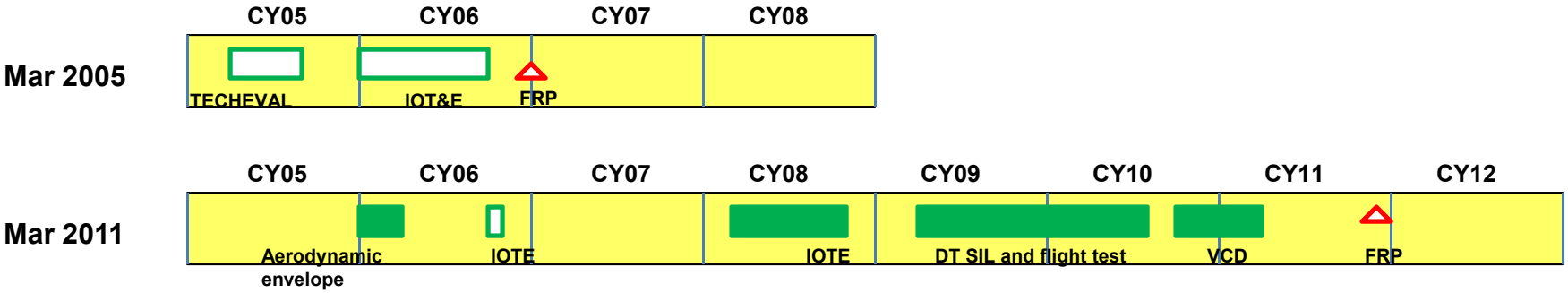

- **Original IDECM program was scheduled for IOC in 2000**
- **Program separated into blocks in 2001 to provide incremental capability**
- **Block 3 IOT&E delayed, started, stopped, re-started, then additional testing conducted to confirm correction of major deficiencies:**
  - 2QFY06: Towed decoy aerodynamic envelope had to be reexamined
  - Aug 2006 IOT&E: Flight testing stopped after four flights for safety (decoys hit aircraft)
  - Feb to Sept 2008 IOT&E: Effective and not suitable (safety and reliability)
  - 1st – 2ndQtr FY11 VCD: Initial analysis indicates safety issues and reliability improved
- **Major Deficiencies:**
  - Towed decoy deployment safety and reliability failures
  - Towed decoy could not be severed due to hardware design flaws
  - Control logic errors led to uncommanded towed decoy deployments
  - Very high built-in test false alarm rate caused unnecessary maintenance and the likelihood that good decoys were severed
- **Intensive software and hardware corrections and structured testing appear to have resolved many issues**
  - IOT&E and VCD testing will support a DOT&E BLRIP Report and FRP decision 3-4QFY11

Proposed Test Event | Completed Test Event | Proposed Decision Point | Completed Decision Point

Large Aircraft Infrared Countermeasures (LAIRCM) Phase II

"Next Generation Missile Warning System"

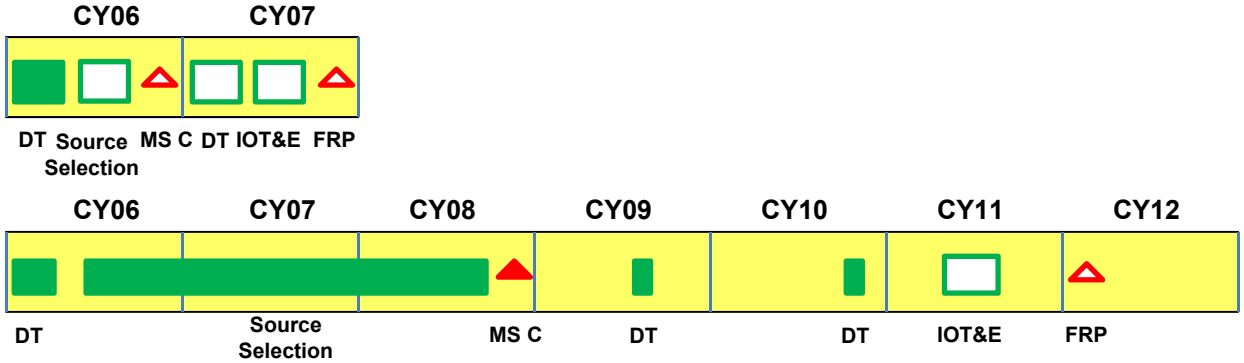

- **LAIRCM Phase II had planned for a quick source selection followed by a quick succession of test events leading to a FRP in 2007.**
- **The source selection lasted two years instead of two quarters due to Air Force source selection and other contractual issues. The delay was not due to technical performance issues.**
- **DT in 2009 uncovered issues that had to be resolved and resulted in the (unplanned) 2010 DT test. However, other major contributing factors to the almost three year delay between MS C and IOT&E have been:**
  - **Implementation of changes to the LAIRCM system required as a result of testing of the DoN LAIRCM system. The Navy's DoN LAIRCM uses the same next generation missile warning system as the Air Force's system. While the Air Force was working on their source selection, DoN LAIRCM pressed ahead, completed their testing, and discovered technical performance issues. Air Force testing likely would have uncovered many of the same issues; and the Air Force issued an Engineering Change Proposal to upgrade and synchronize their system with the Navy's.**
  - **A misunderstanding of the requirements for delivery of Technical Orders between the Program Office and the User caused additional delays in 2010.**
- **The outcome of the source selection and other delays has caused an approximate four year delay in the FRP decision.**

Proposed Test Event | Completed Test Event | Proposed Decision Point | Completed Decision Point

Suite of Integrated Radio Frequency Countermeasures

"Threat warning and self-protection jamming for Army aircraft"

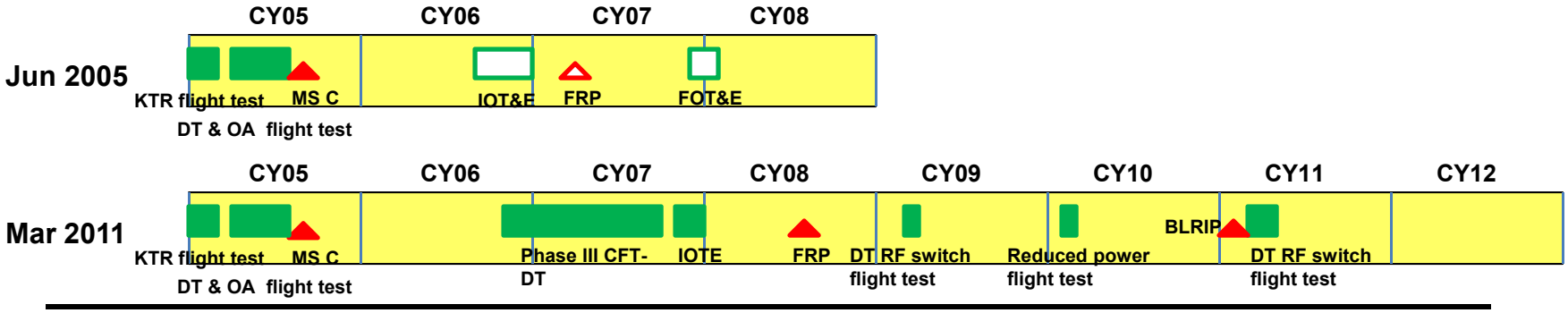

- **Original SIRFC program was scheduled for IOC in about 1999**
- **Army defunded program 2001, SOCOM took over program management**
- **IOT&E delayed to address low-band antenna and RF limiter hardware shortfalls**
  - **IOT&E: BLRIP delayed pending resolution of RF switch failures. SOCOM determined system to be effective, but not suitable**
  - **2009-2010 DT: BLRIP states not effective, not suitable**
- **Major BLRIP Findings:**
  - **RF switch failures reduced reliability to <1/10 of requirement**
  - **Laboratory test fixture did not replicate aircraft installation**
  - **RF countermeasures did not reduce the number of shots or the probability of hit per shot sufficiently "to provide necessary performance required for adequate survivability"**
  - **RF countermeasures transmitted power and/or techniques were insufficient**
  - **Radar Warning Receiver (RWR) sub-system was operationally effective and suitable**
- **Substantial re-design of RF switch and improvements in test methods**
  - **RF countermeasures sub-system were suitable when redesigned RF switch tested**

Air & Space Operations Center – Weapon System (AOC-WS) 10.1

Air Component Commander's Command and Control System

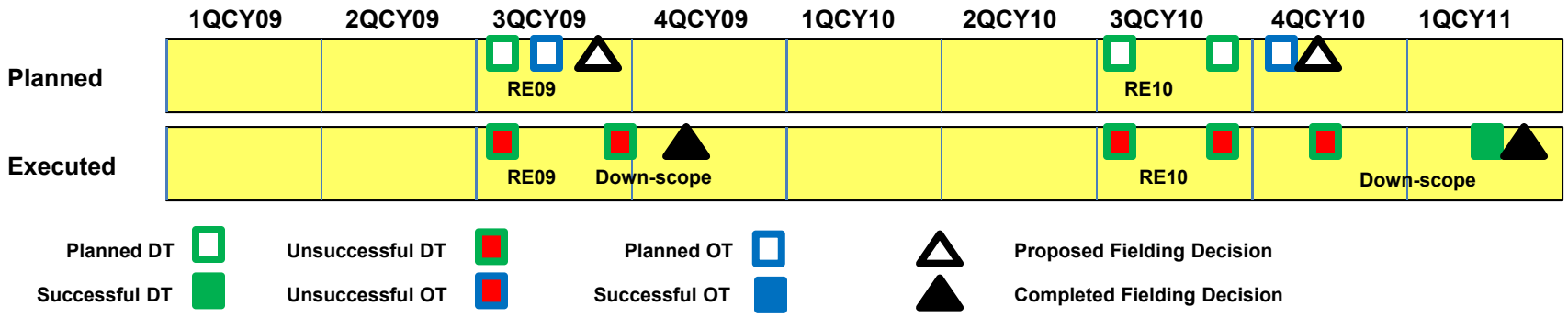

- **Program integrates/fields over 40 third-party software systems to the AOCs. Integration and interoperability among these diverse software have delayed achieving full operational capability and have required sustainment upgrades**
- **Program is trying to use Global Command and Control System for its intelligence and targeting solution**
  - Deficiencies identified in Developmental Testing: Joint Targeting Toolbox which is a third-party application within GCCS is not Integrated with Intelligence & Imagery (I3) suite of applications
- **Recurring Event 09 (RE09) Operational Test cancelled**
  - Only a few very low risk updates were fielded
- **Recurring Event 10 (RE10) OT delayed, down-scoped to DT**
  - DT4 completed without GCCS upgrade (higher risk package)

Multifunctional Information Distribution System Joint Tactical Radio System (MIDS JTRS)

"Next-generation voice-and-data radio"

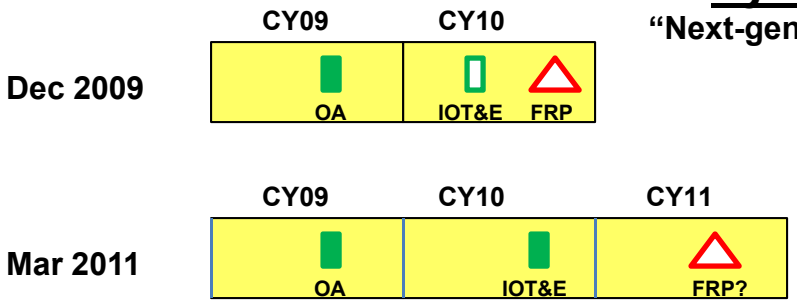

- **FRP has been delayed approximately one year due to performance problems during developmental testing and again during operational testing**
- **In the final Developmental Test events, the system appeared to function properly and AOTR recommended proceeding to IOT&E**
  - However, DOT&E found MTBOMFsystem to be 5.3 hours compared to MTBOMFsystem threshold of ≥25 hours
  - Program was not required to not execute a MIDS JTRS reliability growth program
  - Other performance problems included poor TACAN performance
- **In Operational Testing, the MIDS JTRS as integrated into the F/A-18E/F exhibited failure modes not identified during Developmental Testing (BLRIP is in staffing at DOT&E)**
  - One of two terminal vendors, Via Sat, changed hardware configuration between end of Developmental Test and start of IOT&E. Via Sat terminals contributed to 80% of the terminal Operational Mission Failures. (Via Sat was awarded all of the first lot of limited production orders prior to start of IOT&E)
  - Via Sat omitted industry accepted standards for final test procedures prior to shipping the MIDS JTRS terminals to the IOT&E squadron—bypassing some tests
  - IOT&E indicated MIDS JTRS failed to meet System Reliability and Terminal Reliability threshold requirements
  - Developmental Test did not adequately test all of the mission areas tested by the Operational Test squadron. For example, exchange of J2 PPLI messages among greater than two aircraft simultaneously and initializing MIDS JTRS equipped aircraft for the seven minute alert status.
- **Post IOT&E testing and new FRP Proposed Date**
  - Program Manager is still trying to replicate some of the failures identified during IOT&E and has proposed fixes for some of the other failures. PM assures Via Sat will adhere to all production processes and testing procedures
  - MIDS Program Manager is working with the OSD OIPT lead for development of new milestone date for FRP

Proposed Test Event | Completed Test Event | Proposed Decision Point | Completed Decision Point

Mark XIIA, Mode 5 IFF

"Identification, Friend or Foe System"

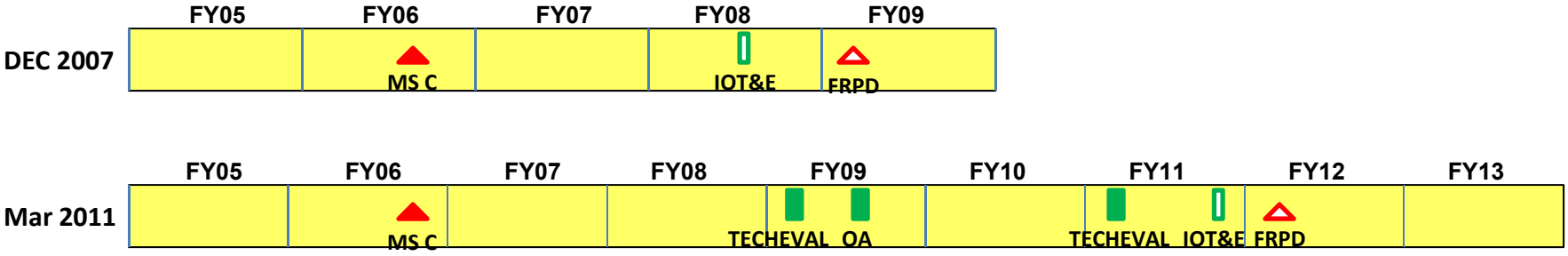

- **IOT&E has been delayed progressively and is now three years late due to performance, suitability and Joint interoperability issues**
  - **Problems included false targets, false target IDs, target track swapping, mis-identifications, poor reliability, EKLS issues and test set availability**
- **Serious issues revealed in the July 2009 OA, led to a re-baselined program being approved by the MDA (Navy)**
  - **New program allowed two year period to identify and correct issues**
  - **Since then, extensive efforts have focused on rectifying documented deficiencies with notable success**
- **Preliminary results from March 2011 TECHEVAL, that included extensive Joint Service participation by all military services, provide confidence that planned Sep 2011 IOT&E will be successful**
  - **The IOT&E will be conducted concurrently with the first JOTA event**

Proposed Test Event | Completed Test Event | Proposed Decision Point | Completed Decision Point

Department of the Navy Large Aircraft Infrared Countermeasure System (DoN LAIRCM)

"IR Countermeasures for USMC CH-53E and CH-46E"

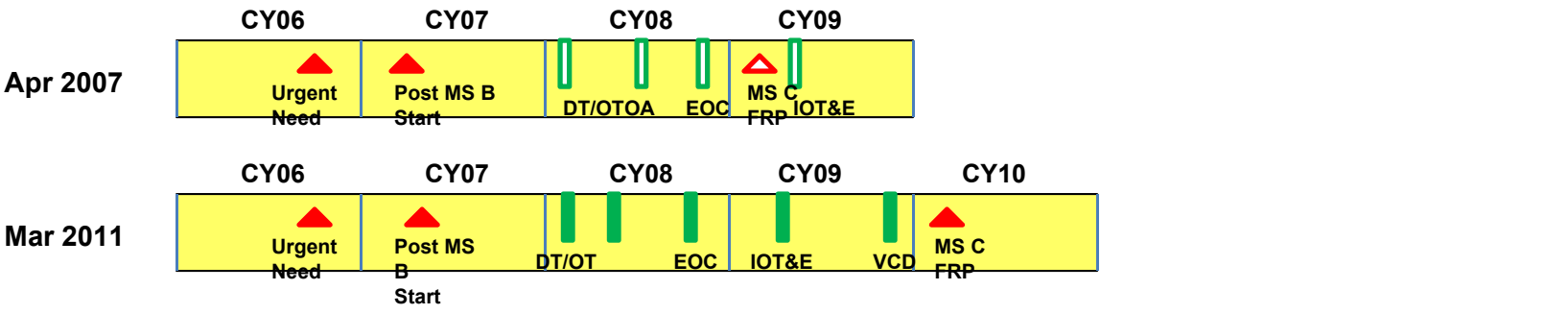

- **Initial Schedule Delay in 2006-2007 because of indecision on Acquisition Strategy: Quick Reaction Capability versus Formal Acquisition Program. Resulted in a combination of both.**
- **Obtaining assets for test was delayed because system was in early stages of production; only a few units were available.**
- **Delay in MS C was because of a major deficiency found in IOT&E**
- **Because of the abbreviated test periods, suitability evaluations were minimal.**

Proposed Test Event | Completed Test Event | Proposed Decision Point | Completed Decision Point

Miniature Air Launched Decoy (MALD)

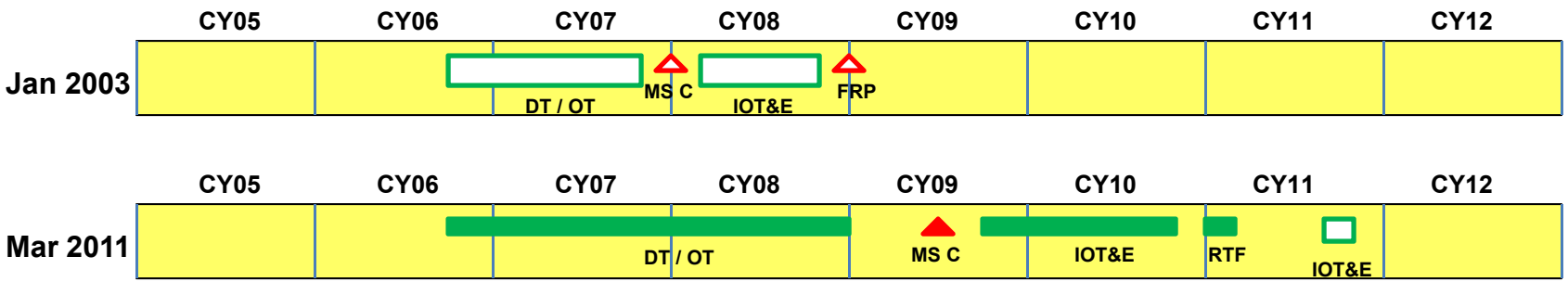

- **Developmental test extended following two early failures**
- **Both development and operational test schedules extended due to range availability**
  - Only one DoD range with required electronic warfare test environment
  - Multiple DoD test and training requirements for test range with limited land, airspace, and personnel
  - Lack of qualified workforce on range results in delayed data analysis and data distribution (> 2 months)
- **Additional tests required after critical failures occurred during IOT&E**
  - Effective, but Not Suitable
  - MALD decertified during IOT&E
  - Return to Flight (RTF) mitigated
  - Manufacturing issues identified
- **IOT&E uncovered two failure modes that would not have otherwise been discovered until the first day of combat**

Proposed Test Event | Completed Test Event | Proposed Decision Point | Completed Decision Point

Outline

- Air Warfare Examples
- Naval Warfare Examples
- Land Warfare Examples
- Net-Centric Examples
- Missile Defense Examples

Remote Minehunting System

(Remote semi-submersible vehicle and towed sonar set to detect, localize and identify mines; key component of Littoral Combat Ship Mine Countermeasures Mission Package)

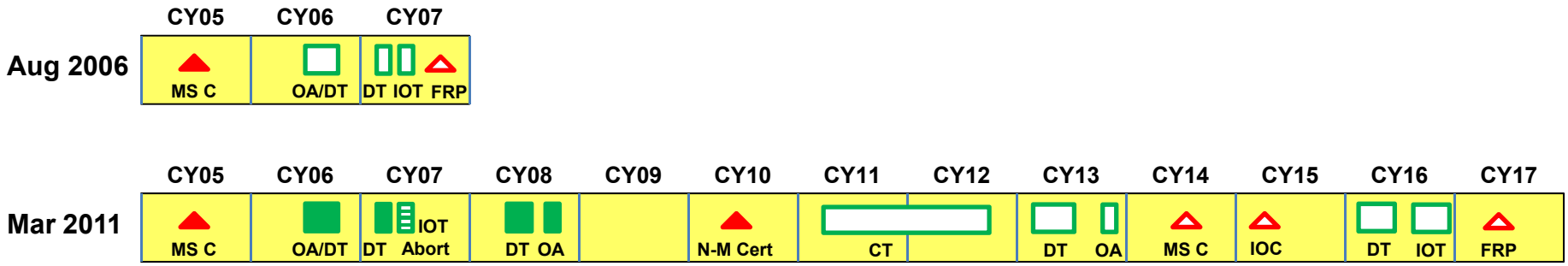

- **IOT&E and FRP have been delayed more than 9 years due to additional system development focused on improving vehicle reliability.**
- **Most of the system's technical parameters have been demonstrated under DT conditions, but reliability has been a recurring deficiency.**
  - **Current estimate of vehicle reliability is 20 to 45 hours MTBOMF compared to 150 hour MTBOMF requirement for system.**
- **During CY07 IOT&E attempt, system was decertified for test due to numerous reliability issues.**
- **IOT&E was rescheduled for FY08 but test was downgraded to an OA at the OTRR because of continuing concerns about reliability.**
- **The program was restructured in 2010 because of a critical Nunn-McCurdy cost breach.**
  - **MS C was rescinded and a new MS C established in CY14.**
  - **The reliability requirement was reduced from 150 hours MTBOMF for the <u>system</u> to 75 hours MTBOMF for the <u>vehicle</u>.**
  - **The program was directed to embark on a program to grow vehicle reliability to at least 75 hours MTBOMF.**

Proposed Test Event | **Completed Test Event** | **Proposed Decision Point** | **Completed Decision Point**

Airborne Laser Mine Detection System (ALMDS)

Component of LCS Mine Countermeasures Mission Package for Shallow Mine Detection

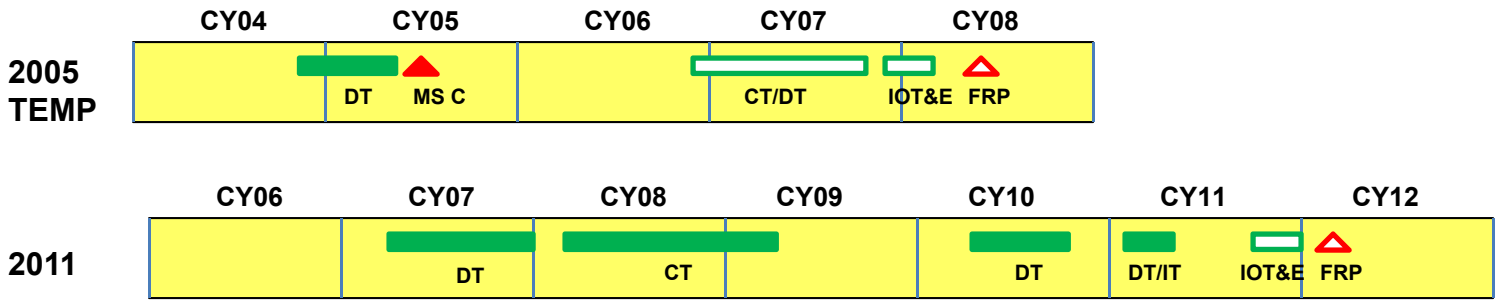

- **FRP delayed nearly 4 years because of developmental delays**
- **Problems revealed in DT**
  - Inability to meet depth requirement (partially mitigated by reducing first increment depth requirement to 70 percent of ORD requirement)
    - Current depth performance ~ 67 percent of ORD requirement
  - Excessive false contact density
    - Program reports 183 percent of ORD limit
    - Will likely be higher in OT -- Potential “showstopper”
  - Below threshold probability of detection and correct classification (currently 95 percent of ORD requirement)
  - Receiver failures
- **Problems found in DT reduced but not eliminated through hardware and software improvements**
- **Current performance considered best achievable with existing design**
- **No OT conducted to date**

Proposed Test Event | Completed Test Event | Proposed Decision Point | Completed Decision Point

MH-60S Block 2A AMCM Helicopter with AN/AQS-20A Minehunting Sonar

Key Components of LCS Mine Countermeasures Mission Package

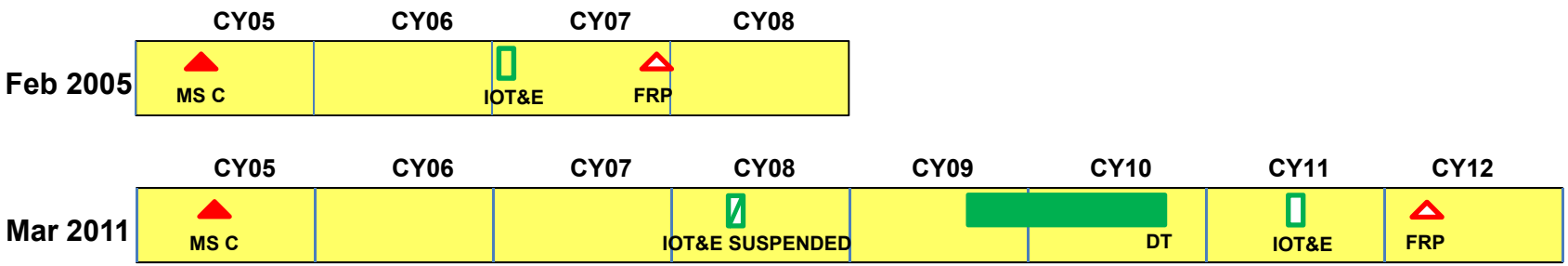

- FRP Decision has been delayed more than 4 years because of system performance deficiencies
- Commencement of 2007 IOT&E delayed until March 2008 because of tow cable/winch developmental issues.
- IOT&E suspended and system decertified from OT in April 2008 due to numerous system reliability deficiencies, primarily associated with tow cable and winch (cable miswrap on drum, jammed cable).
- Corrective actions recommended by Independent Technical Assist Team following review of AMCM Mission Kit design, operational procedures, and system reliability.
- Modifications incorporated and system re-entered DT in July 2009. DT officially completed in Aug 2010, but testing of fixes is continuing.
  - Identification/correction of AMCM Mission Kit deficiencies continues.
  - AQS-20A detection/localization performance not meeting technical requirements – sponsor contemplating ORD change
- Shore-based phase of IOT&E scheduled to commence May 2011.
- FRP Decision anticipated in Feb 2012.

Proposed Test Event | Completed Test Event | Proposed Decision Point | Completed Decision Point

Airborne Mine Neutralization System

Component of LCS Mine Countermeasures Mission Package

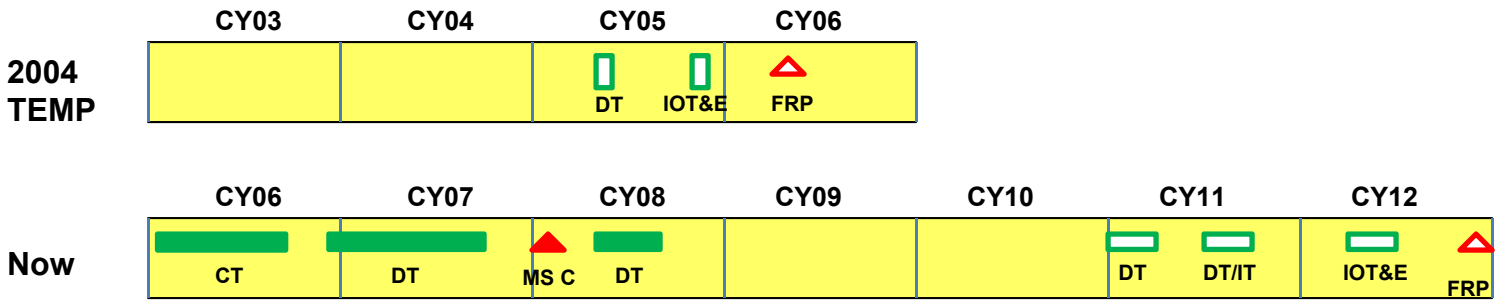

- **FRP slipped more than 6 years because of developmental delays**

- **Problems revealed in DT**
  - Difficulty passing fuze environmental performance tests (drop test)
  - Multiple neutralizer failures
  - Ethernet communications failures within Launch and Handling System
  - Current DT paused because of software issues

- **No OT conducted to date – will not be completed before LCS 2 DT with Mine Countermeasures Mission Package**

Proposed Test Event | Completed Test Event | Proposed Decision Point | Completed Decision Point

USS San Antonio (LPD 17)

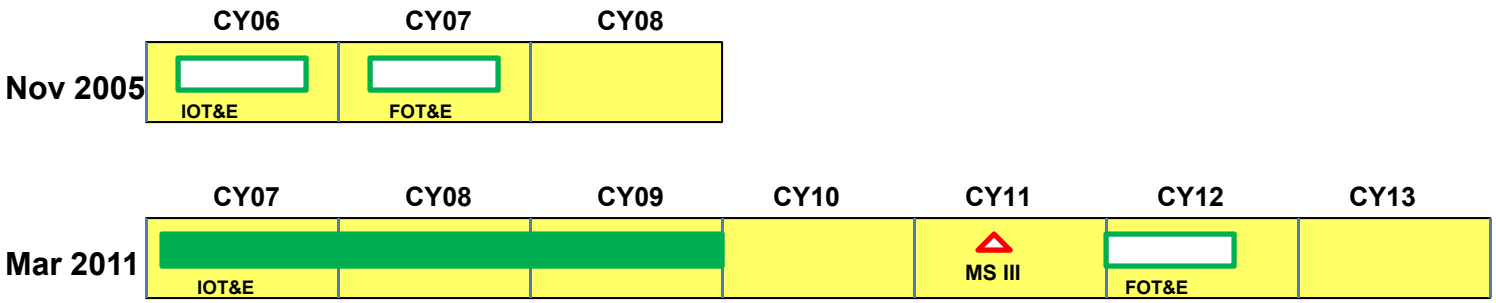

- **IOT&E start was delayed by one year due to the ship's poor materiel condition at delivery.**
  - **LPD 17 delivered in July 2005 (Delivery threshold in original APB was Dec 2002)**
  - **March 2007 Navy Inspection described 193 of the ship's 943 spaces as unfinished and noted numerous materiel deficiencies to include:**
    - **Reverse Osmosis water production system was unreliable and could not support embarked forces**
    - **Ship Wide Area Network was unreliable**
    - **Ship's steering systems were unreliable**
    - **Cargo Weapon Elevators were unsafe**
    - **Two of the ship's three hinged vehicle ramps were inoperable**
- **LPD 17 deployed in August 2008**
- **Ship's materiel condition, ship schedule (e.g., extended post shake-down availability period), and the availability of test resources (e.g., aerial targets and Marines) delayed IOT&E completion**
- **June 2010 BLRIP report indicated that LPD 17 was not effective, suitable or survivable in a combat environment primarily due to poor reliability of critical systems and combat system problems**
- **MS III decision is scheduled for April 2011 (Original APB scheduled MS III for Feb 2008)**

Standard Missile - 6 (SM-6)
Aegis ship surface-to-air missile

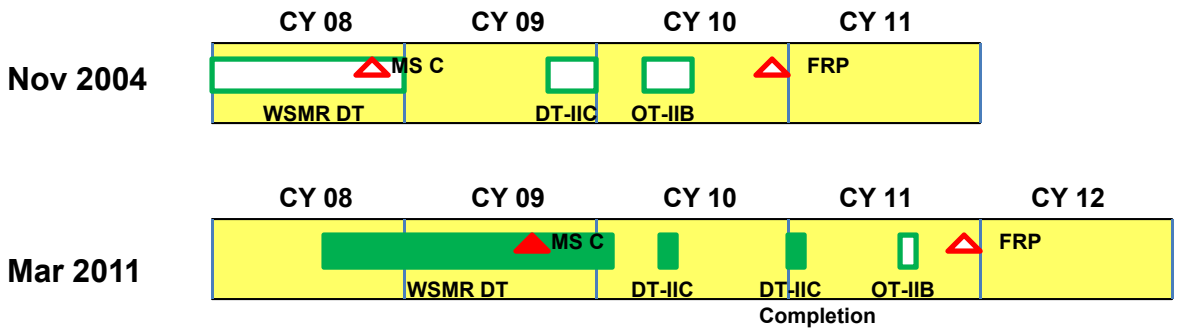

- **FRP has slipped one year because of developmental delays**
- **IOT&E delayed more than one year because of two significant problems, described below**
- **In WSMR DT, a missile failed to launch because the missile computer fired both tactical seeker batteries early, causing electrical damage**
  - Missile circuitry was redesigned to protect against electrical surges
- **Two failures of the Target Detection Device delayed completion of DT-IIC until January 2011**
  - Failures were caused by test telemetry equipment that is not included in the tactical missile. Software has been redesigned and ground tested to prevent recurrence.
- **Problems discovered in past testing have not recurred once corrected**

Proposed Test Event | Completed Test Event | Proposed Decision Point | Completed Decision Point

Littoral Combat Ship (LCS)

High speed, shallow draft ships designed for operations in the littorals

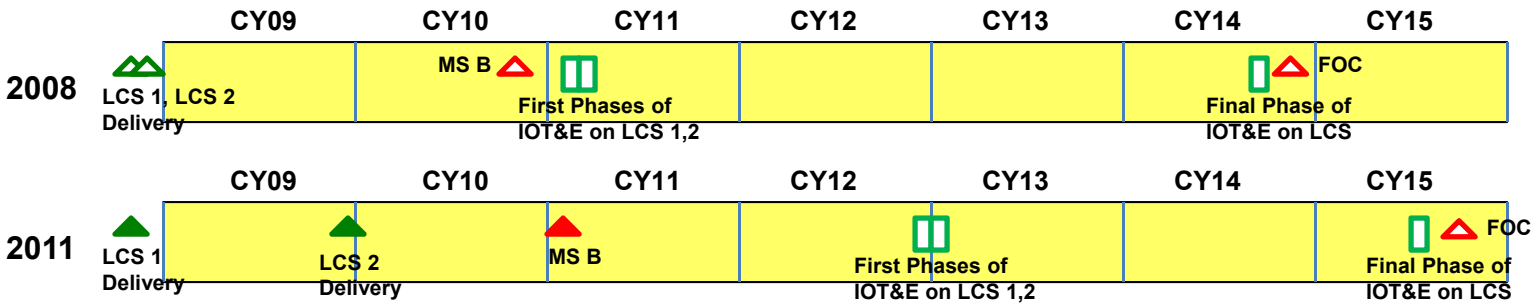

- **Start of IOT&E delayed nearly 2 years**
  - LCS 1 early deployment and participation in RIMPAC exercise delayed completion of post-delivery tests, trials, and DT
  - LCS 2 delivery slipped nearly 1 year because of construction delays and problems encountered during Builder's Trials (flooding and propulsion issues)
- **Completion of final phase of IOT&E and Full Operational Capability (FOC) will be delayed at least 1 year**
  - Delays in Mine Countermeasures Mission Modules force incremental testing vice end-to-end evaluation
  - Cancellation of Non-Line of Sight (NLOS) missile system will delay availability of surface-to-surface missile capability for Surface Warfare Mission Package
  - Reconfiguration of Anti-Submarine Warfare Mission Package has delayed availability
  - Additional delay likely

SSN 774 Virginia Class Submarine

TEMP Rev D Oct 2002 and DAES review 2003

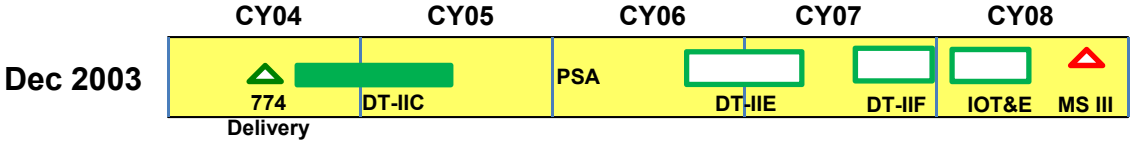

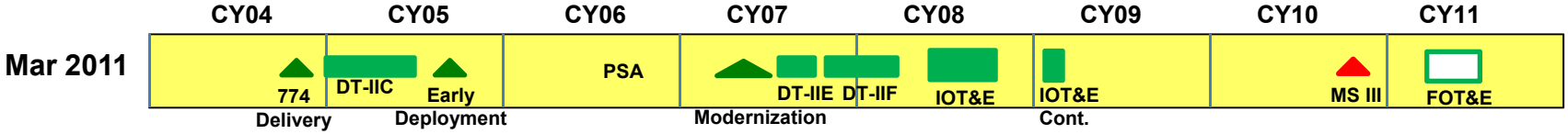

- **Addition of an early deployment soon after ship delivery, a modernization period, and a lengthy Post-Shipyard Availability (PSA) period contributed to an overall slip in schedule**
- **OPEVAL start was delayed by several months due to materiel and reliability issues discovered during TECHEVAL**
- **Completion of OPEVAL was delayed due to the materiel condition of the ship.**
  - **USS *Virginia* experienced 4 fail-to-sails during IOT&E due to materiel reliability**
  - **Lead ship spent 2 months in dry dock to repair Main Seawater Valves**
  - **Lack of available target services (test resources) contributed to the delays**
- **DOT&E BLRIP report issued November 2009**
  - **Several missions/capabilities planned for IOT&E in 2008 remain untested and will require FOT&E to complete**
  - **Testing to confirm capability to conduct operations with Navy SEALs and Dry-Deck Shelter has been postponed to FY13; redesign of equipment required; unavailable test assets.**

DDG 1000 Zumwalt Class Destroyer

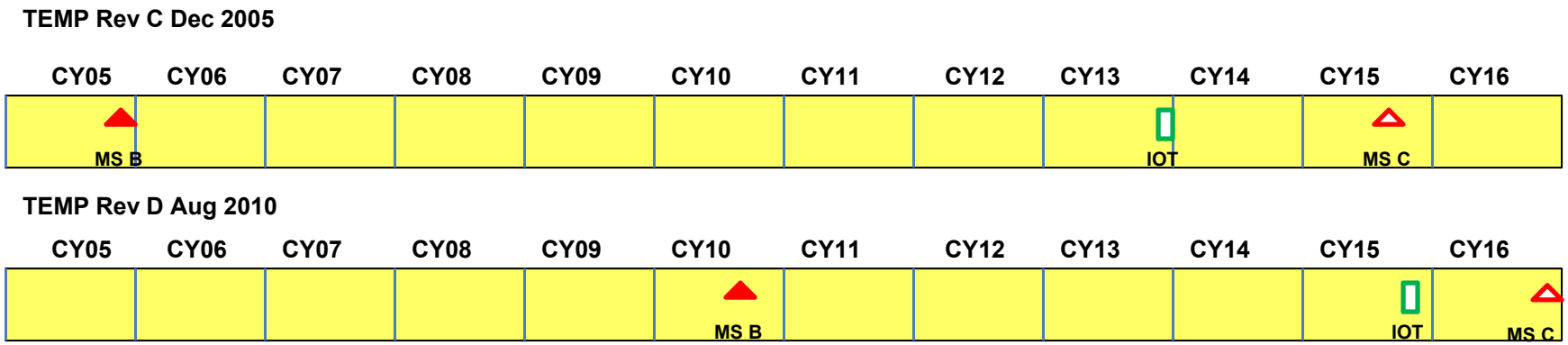

- Original MS B decision rescinded by AT&L in June 2010 due to Nunn-McCurdy breach caused by increased unit cost when the total number of ships was reduced from 7 to 3. Restructured program achieved new MS B in October 2010.
- The restructured program eliminated the Volume Search Radar from the program and moved IOC from FY15 to FY16.
- Revisions to the program's schedule shifted IOT&E to the right by almost 2 years.

Proposed Test Event | Completed Test Event | Proposed Decision Point | Completed Decision Point

Outline

- Air Warfare Examples
- Naval Warfare Examples
- → Land Warfare Examples
- Net-Centric Examples
- Missile Defense Example

CH-47F Chinook Cargo Helicopter

(Army heavy lift helicopter that provides combat resupply and transportation for ground forces. Digital cockpit was key new feature.)

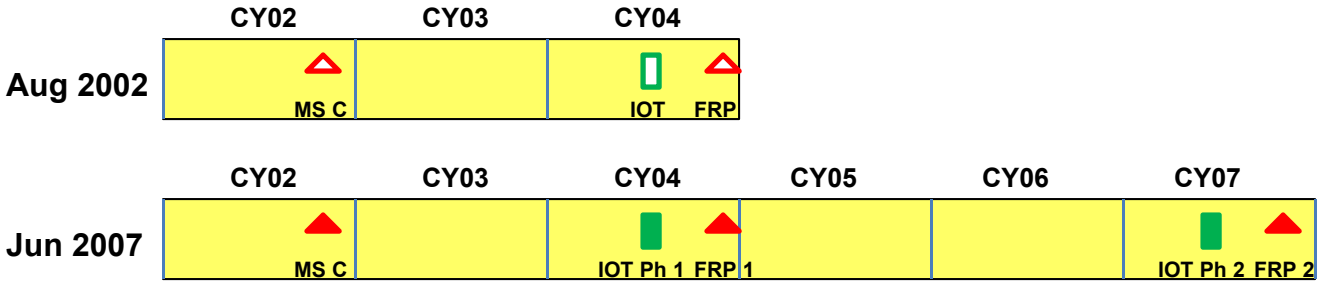

- **Reliability problems discovered in developmental and operational testing**
  - Program not funded or structured for reliability growth
- **In IOT Phase 1, Helicopter was effective, but not suitable**
  - Did not meet two of four reliability requirements
  - Could not send/receive digital messages as required by KPP
  - Airframe fatigue cracking prevalent throughout the fleet
- **Army merged this program with Special Operations MH-47G program**
  - Approved FRP for Lots 1 – 5
  - Production line front-loaded with 46 MH-47G aircraft. One CH-47F of this design produced for Army.
- **Army then redesigned cockpit, avionics, and airframe**
  - All-digital displays, flight controls, and avionics (initial design had been a mix of analog and digital)
  - Funded for reliability growth
  - New monolithic frames for fuselage
- **Effective and Suitable at IOT Phase 2**
  - All subsequent production CH-47F aircraft with new cockpit and airframe design

IOT Phase 1 Reliability

	ORD Threshold (HRS)	Demonstrated Reliability (HRS)
MTBMA	44	19.7
MTBMAF	7	11
MTBEMA	3.3	2.5
MTBUMA	0.79	1.28

Proposed Test Event | Completed Test Event | Proposed Decision Point | Completed Decision Poin

USMC AH-1Z Attack Helicopter

Upgrades and extends life of existing fleet of USMC Cobra helicopters with digital cockpits and four-bladed rotors.

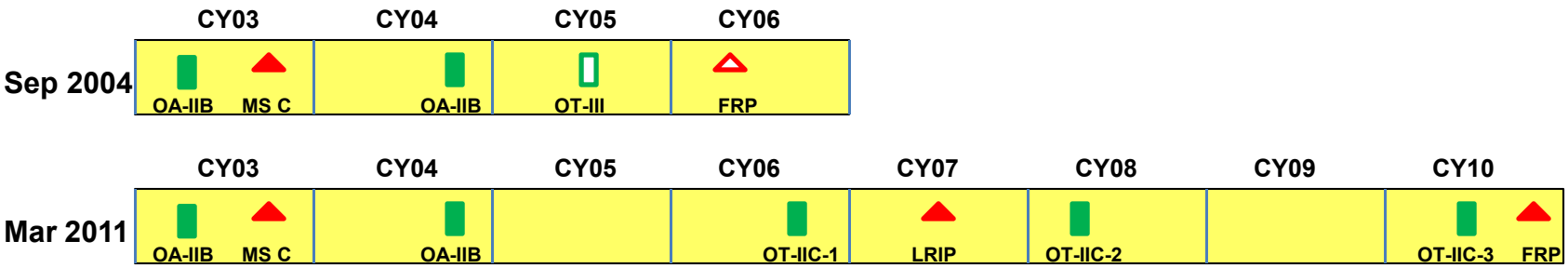

- **IOT Phase 1 (OT-IIC-1) delayed by technical difficulties with hydraulic system, composite rotors, integrated helmet, and integration of targeting sensor**
  - **OT with "production representative" EMD aircraft and targeting sensor; not LRIP items**
  - **AH-1Z effectiveness limited by poor Targeting System reliability, excessive pilot workload, poor performance of integrated helmet, and rocket delivery restrictions**
  - **Navy continued in LRIP, scheduled IOT Phase 2**
- **In OT-IIC-2, AH-1Z reliability (primarily Targeting System failures) was so poor that the Navy terminated AH-1Z testing**
  - **OT with "production representative" EMD aircraft and targeting sensor; not LRIP items**
  - **Navy shifted most LRIP quantities to UH-1Y variant and scheduled IOT Phase 3**
- **In OT-IIC-3, AH-1Z was effective and suitable**
  - **OT with LRIP aircraft and targeting sensor**

Vertical Take-off and Landing Unmanned Aerial Vehicle (VTUAV)

(Provides the Navy a ship-based, tactical, ISR asset)

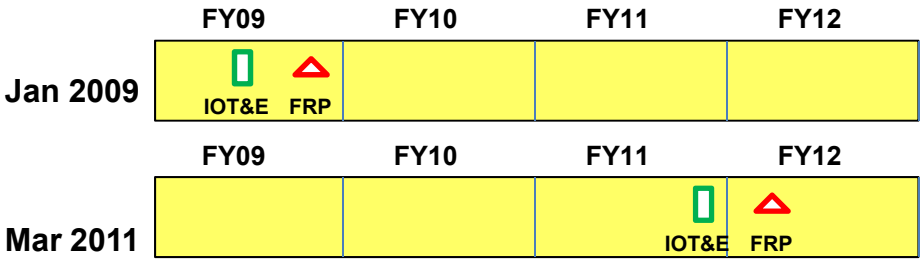

- **Schedule originally tied to Littoral Combat Ship fielding**
- **Suitability issues reported in the April 2009 "Developmental Test to Operational Test Transition Report" delayed start of June 2009 IOT&E**
  - Excessive Operational Mission Failures (MTBOMF = 15.1 versus threshold value of 30.0)
  - Numerous False Alarms (Mean Time between False Alarm = 0.8 hours versus threshold value of ≥ 4.0 hours)
- **Implementing threshold capabilities required more software drops than anticipated**
  - Four major software versions in 2005 to nine versions in 2011
- **Lost-link events in December 2009 and August 2010 required additional software testing and upgrades**
- **Recently-proposed September 2011 start to IOT&E likely to be further delayed**
  - Program has one set of shipboard Ground Control Station equipment
  - Single set deploys with ships for Military Utility Assessments - if system is not ready for IOT&E before ship sails, IOT&E is further delayed

Proposed Test Event | Completed Test Event | Proposed Decision Point | Completed Decision Point

Spider Networked Munition

(A non-persistent anti-personnel landmine system)

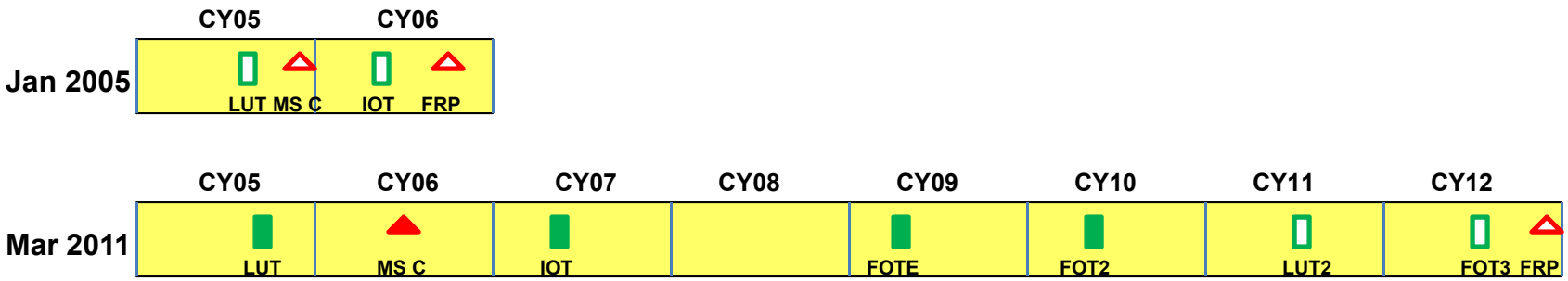

- **FRP has been delayed 6 years due to poor performance**
- **In developmental testing, the system demonstrated technical parameters**
- **In operational testing, soldiers have not been able to operate and sustain the system**
  - September 2005 LUT: Limited operational environment → Effective w/limitations but Not Suitable
  - April 2007 IOT: Adequate operational environment → Not Effective and Not Suitable
  - March 2009 FOTE: Adequate operational environment → Not Effective and Not Suitable
  - May 2010 FOT2: Adequate operational environment → Effective but Not Suitable
- **Recurring deficiencies**
  - Effective fighting of a spider field requires a unit well trained in non-Spider specific soldier and unit skills
  - Prior to FOT2, test units could not effectively operate the system to produce threat casualties
  - System C2 software is complex and difficult to operate
  - Operator C2 errors are common and cause systems to lock users out
- **UMR fielding of 66 systems occurred in 2009, but nearly no use of the system has been reported**
- **Software upgrades are being incorporated and training enhancements implemented**
  - Future testing includes a reliability focused LUT2 and a full operational test in FOT3
  - Future testing will support a DOT&E BLRIP Report and FRP decision in late 2012.

Proposed Test Event | Completed Test Event | Proposed Decision Point | Completed Decision Poin

Precision Guidance Kit (PGK)

(An artillery fuze providing GPS guidance for 155mm high explosive projectiles)

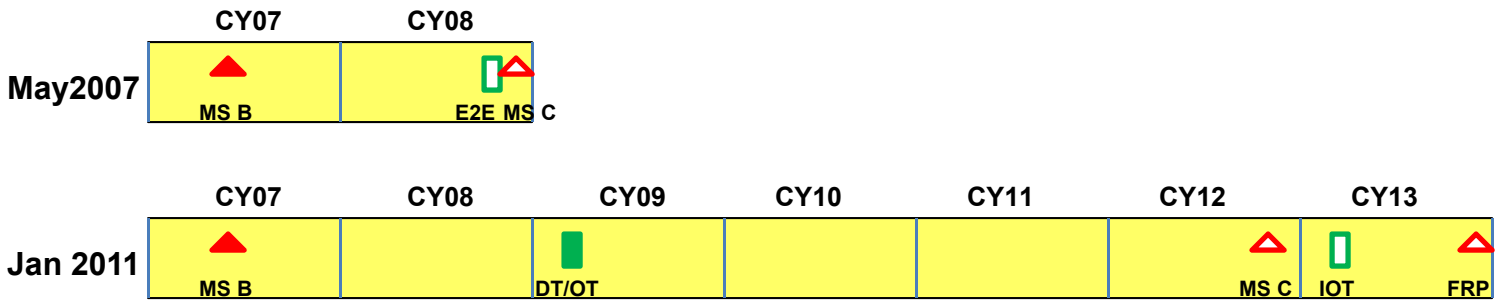

- **MS C has been delayed 4 years because the system experienced performance and reliability problems in developmental testing**
- **The May 2007 TEMP's 18-month developmental schedule (May '07 – November '08) was acknowledged by PGK's MDA to be "aggressive"**
- **In developmental testing**
  - Demonstrated reliability in 2009 - 2010 testing was 63% versus the planned growth curve value of 87%
  - Extensive failure analyses indicated the need for design changes and additional performance testing
- **In January 2011 a re-baselined program was approved by the Army Acquisition Executive**

Proposed Test Event | Completed Test Event | Proposed Decision Point | Completed Decision Point | E2E End-to-End Firing Demonstration

Excalibur Increment Ia-2

(An extended-range, GPS-aided, precision 155mm artillery projectile)

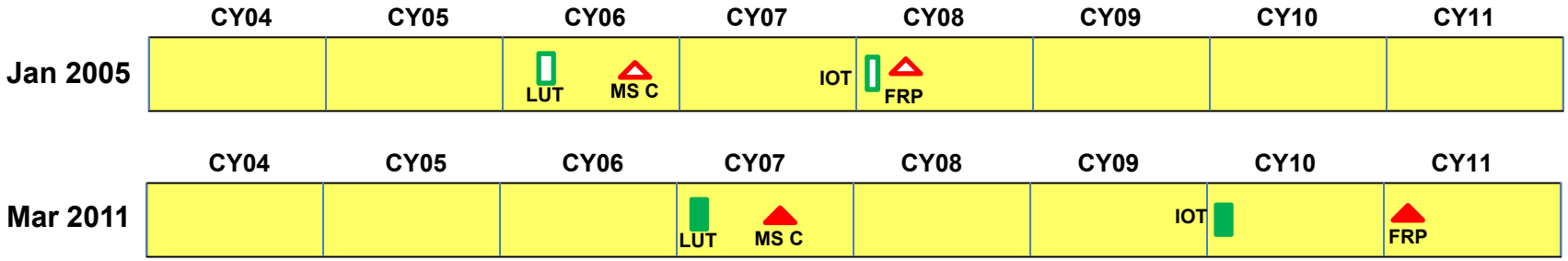

- **FRP was delayed 33 months due to reliability problems and programmatic changes**

- **MS C was delayed 9 months because of reliability problems in developmental tests**
  - Assessed reliability in December 2006 was 73% against an 85% requirement

- **The IOT was delayed an additional 15 months because of reliability problems that surfaced in developmental testing and a change in the threat.**
  - Replaced Inertial Measurement Unit vendor to improve reliability
  - Change in description of the GPS jamming threat required redesign of GPS antennas.
  - Reliability problems continued with top propellant charge in IOT (50%).

- **The FRP decision was further delayed 9 months because of a Nunn-McCurdy breach triggered when the Army reduced the acquisition objective from 30,000 to 6,264 rounds.**

Proposed Test Event | Completed Test Event | Proposed Decision Point | Completed Decision Point

Paladin Integrated Management (PIM)

(A Service Life Extension Program for the Paladin self-propelled howitzer and ammunition carrier)

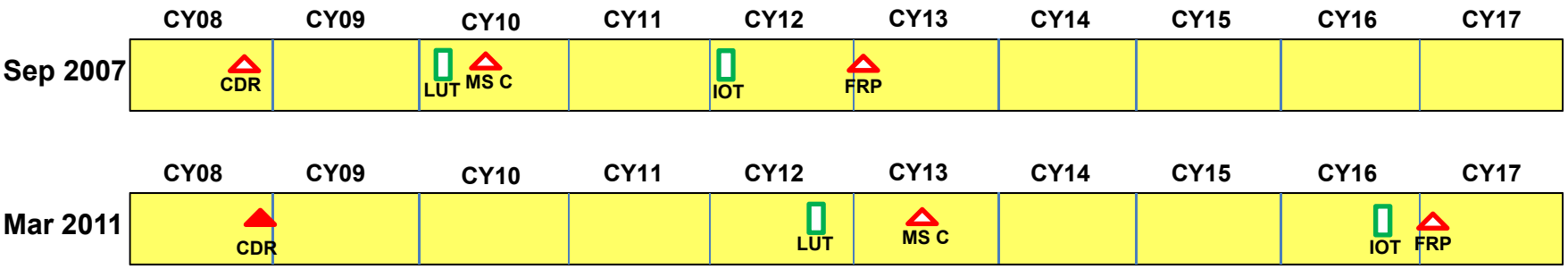

- **FRP has been delayed 4 years due to optimistic initial expectations, technical and management issues, and programmatic changes.**
- **Program Office's initial schedule was optimistic.**
  - Assumed immediate contract award was possible
  - Assumed prototypes could meet reliability requirements as soon as delivered so no reliability growth plan needed
  - Assumed prototype deliveries could be made by 3QCY09
- **Technical and management issues became apparent during prototype development**
  - Prototype reliability below expectation in contractor checkouts
  - Poor communication of survivability requirement to contractor required design changes and delay in commencement of Ballistic Hull and Turret test
  - Expected prototype deliveries for government testing have been delayed approximately 21 months to 2QCY11.
  - Delivery of IOT LRIP test articles now expected to take 36 months from MS C
- **Programmatic changes have delayed initiation of a viable program schedule**
  - Army Acquisition Objective change raised PIM to ACAT ID, increasing documentation requirements
  - Army seeking JROC approval to reduce reliability KPP threshold from 0.81 to 0.75 probability of mission completion

Joint Light Tactical Vehicle (JLTV)

(HMMWV replacement with improved capabilities)

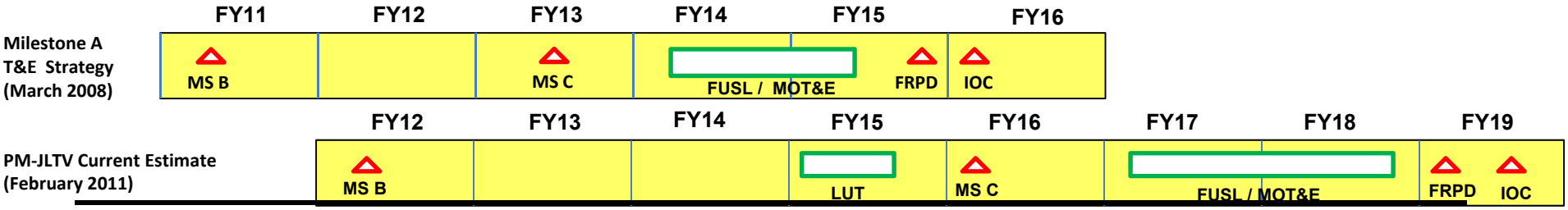

- **Milestone B has been delayed from March 2011 to January 2012 (10 months)**
  - Four-month delay in contract award (July 2008–October 2008)
  - Three-month delay after contract award was protested (November 2008–February 2009)
  - Three months delay are attributable to requirements refinements, to include changes in required Force Protection levels
    > Developmental testing illuminated the types of requirements refinements and capability tradeoffs that are necessary, particularly with respect to transportability, mobility, payload, reliability, and force protection

- **Milestone C has been delayed from April 2013 to January 2016 (33 months)**
  - Engineering and Manufacturing Development Phase was expanded to 48 months from planned 24 months to allow:
    > More complete contractor systems engineering processes/baselines
    > Adequate time for design/manufacture, including more extensive component/sub-component qualification testing and longer contractor shakedown testing
  - Ten months delay in Milestone B

FUSL: Full Up System Level Live Fire Test & Evaluation
MOT&E: Multi-service Operational Test & Evaluation
LUT: Limited User Test
FRPD: Full Rate Production Decision
IOC: Initial Operational Capability

Proposed Test Event **Proposed Decision Point**

Early Infantry Brigade Combat Team (E-IBCT)

(A collection of sensors and communications to improve situational awareness of infantry brigades)

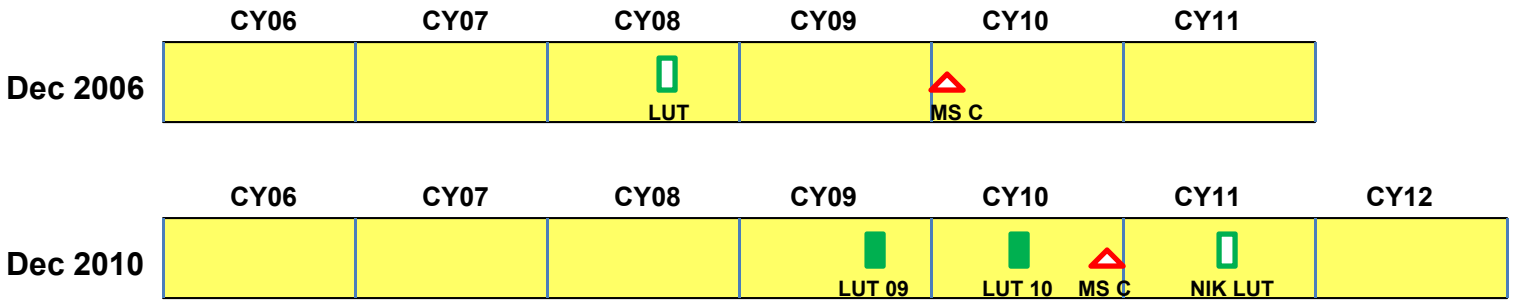

- **Planned FCS Spin-Out (Dec 06 FCS SAR)**
  - **LUT in Jun 08**
  - **MS C in Jan 09**
- **Due to programmatic changes, LUT in CY08 was cancelled.**
  - **Systems not ready for test.**
  - **Focus shifted from HBCT to IBCT**
- **As a result, MS C slipped one year from Jan 09 to Dec 09**
- **LUT in Sep 09 revealed significant reliability issues**
- **ADM in Dec 2009 approved purchase of one brigade set of each of the five sub-systems**
  - **T-UGS, U-UGS, Class I UAS, SUGV and NIK**
- **LUT in Sep 10 revealed improved reliability, but lack of military utility on part of several of the sub-systems**
- **ADM in Dec 10 cancelled three sub-systems, approved two others; cancelled E-IBCT program**
  - **T-UGS, U-UGS and Class I UAS cancelled**
  - **SUGV approved for two brigade sets**
  - **NIK approved for one additional brigade set and continued development**
  - **NIK LUT to be held in June 2011**

Proposed Test Event | **Completed Test Event** | **Proposed Decision Point** | **Completed Decision Point**

JTRS Handheld Manpack and Small Form Fit (HMS) Rifleman Radio

(A platoon, squad and team level command and control radio capable of IP-based voice and data transfer)

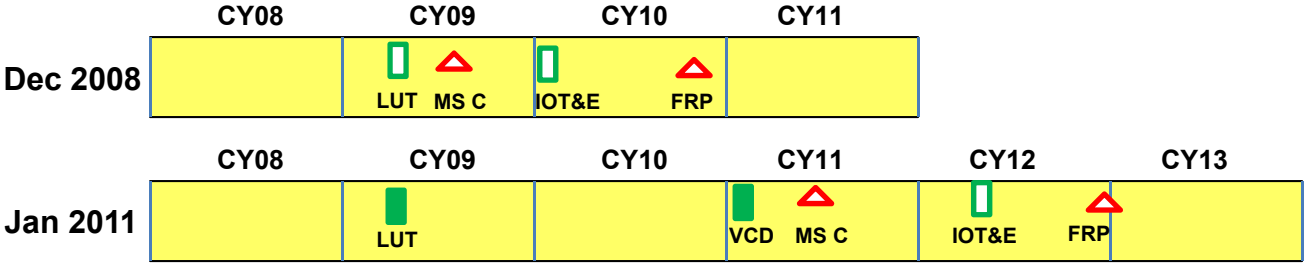

- **The Milestone C and following events have been delayed about two years.**
- **Major performance deficiencies in the system (reliability, range, battery life, thermal rise and immature doctrine) were identified at the April 2009 Limited User Test (LUT).**
- **The program office initiated a complete hardware redesign. This required a set of governmental developmental testing and a Verification of Correction of Deficiencies (VCD) test for January-February 2011.**
- **Preliminary analysis of the VCD data indicates the system performance is improved over what was observed at the LUT.**

Proposed Test Event | Completed Test Event | Proposed Decision Point | Completed Decision Point

Gray Eagle Unmanned Aircraft System

(Provides the Army Division Commander with unmanned Reconnaissance, Surveillance, Security, Attack, and Command and Control Capabilities)

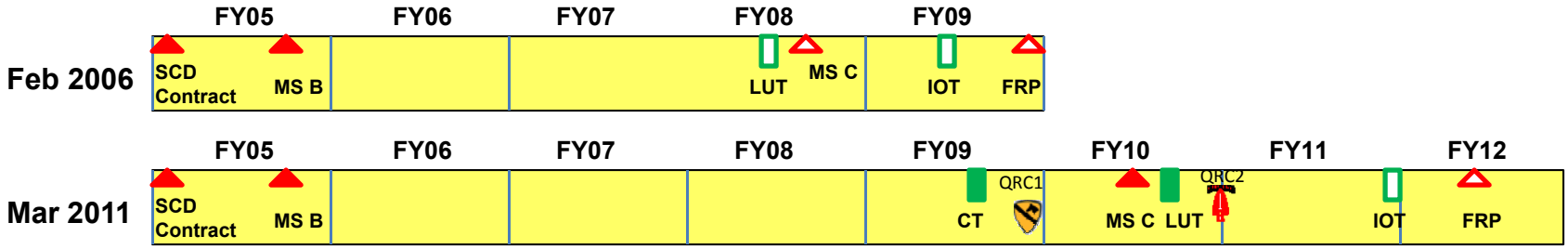

- **FRP decision has been delayed 2 years because of requirements changes between MS B and MS C and ISR surge**
- **Requirements change after MS B**
  - **Originally Corps-level intelligence asset, now a Division-level armed reconnaissance/attack asset**
  - **Originally contractor maintenance concept, now a 100% soldier maintenance concept**
  - **Increase in system capability requirements**
- **SECDEF direction in March 2008 to support the ISR surge requirement**
  - **Deployed Quick Reaction Capability-1 to 1st Cavalry Division in July 2009**
  - **Deployed Quick Reaction Capability-2 to Special Operations Command in September 2010**
- **Customer Test and LUT performed in conjunction with fielded unit training rotations**
  - **Testing in conjunction with unit training certification added no additional time to the rapid fielding schedule**
- **Both early operational tests were beneficial**
  - **Provided the program insights into reliability issues**
  - **Demonstrated operational capabilities of each quick reaction unit; both far short of full program of record requirement**
  - **Performance of deployed quick reaction units consistent with operational test results**
- **IOT currently scheduled for October 2011**
  - **Army working on training, personnel, and technical development issues**

Proposed Test Event | **Completed Test Event** | **Proposed Decision Point** | **Completed Decision Point**

Stryker Mobile Gun System (MGS)

(A variant of the Stryker family equipped with a 105mm cannon)

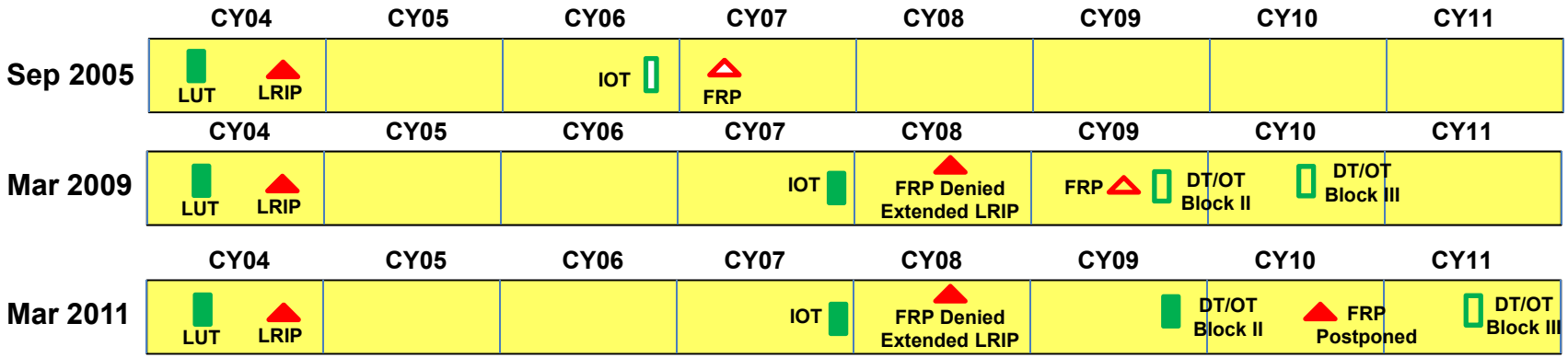

- **FRP delayed 2 years due to performance issues identified in operational testing and initial deployment**
- **Secretary of Defense deployment waiver listed 23 performance deficiencies (sights, secondary weapons, reliability, survivability) identified in BLRIP to be corrected before FRP**
- **FRP postponed until Stryker Modernization to correct remaining deficiencies**
- **Operational Testing has continued to demonstrate reliability and other issues**
  - April 2004 LUT: Limited operational environment → Demonstrated wall breach KPP but poor reliability
  - Oct-Nov 2007 IOT: Adequate operational environment → Effective for small-scale contingencies; suitable with deficiencies; survivable in some operational scenarios
  - July 2009 DT/OT: Limited operational environment → Demonstrated corrective action for 12 of 23 deficiencies
  - Sep 2010 DT/OT: Postponed to June 2011 due to quality problems on Extended LRIP vehicles
- **Ongoing Actions**
  - Reliability remains poor. Demonstrated 10 MRBSA in the LUT against a requirement of 81 MRBSA
  - IOT delayed for a year due to reliability growth program; IOT demonstrated 53 MRBSA
  - Block III Validation of corrective action for deficiencies delayed for one year due to stop work order issued as a result of several production quality problems identified in contractor shakedown testing

Proposed Test Event | Completed Test Event | Proposed Decision Point | Completed Decision Point

Outline

- Air Warfare Examples
- Naval Warfare Examples
- Land Warfare Examples
- → Net-Centric Examples
- Missile Defense Examples

Net-Centric Enterprise Services

NCES provides DoD Enterprise-level services for Collaboration, User Access, Content Discovery & Delivery, and Service Oriented Architecture Foundation Products

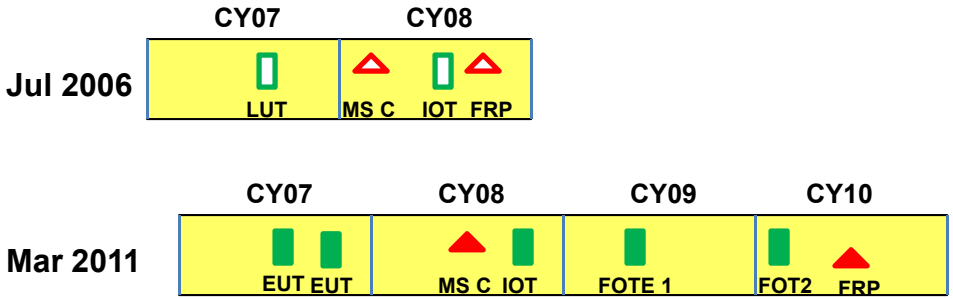

- **FRP has been delayed 2 years because the system repeatedly failed operational testing**
- **Technical parameters were initially demonstrated in Developmental Testing**
- **In Operational Testing users have been unable to operate and sustain the system**
  - **July 2007 EUT:** Limited operational environment → Effectiveness/Suitability Undetermined.
  - **Sept 2007 EUT:** Limited operational environment → Effectiveness/Suitability Undetermined.
  - **March 2009 FOTE 1:** Inadequate operational environment → Effectiveness/Suitability Undetermined
  - **Feb 2010 FOT 2:** Adequate operational environment → Effective and Suitable with Limitations
- **Recurring Deficiencies**
  - Shifts in the Acquisition Strategy after Milestone B which included replacement of managed service providers of core enterprise services significantly delayed the program.
  - Developing a streamlined means of testing rapidly evolving, commercially managed, enterprise services required an adaptive test strategy including continuous monitoring of distinct user communities.
  - OT events identified widespread audio and video latencies and session drop outs for NCES Collaboration services.
  - Immature policies, processes, and procedures combined with an absence of end-users limited the ability to assess the intended purpose of NCES service oriented architecture foundation services.
  - An extremely limited user base for many services at this point in time precluded an assessment of scalability to the levels envisioned in the CPD .

Proposed Test Event | Completed Test Event | Proposed Decision Point | Completed Decision Point

National Polar-Orbiting Operational Environmental Satellite System (NPOESS): Weather Satellite with Ground Support

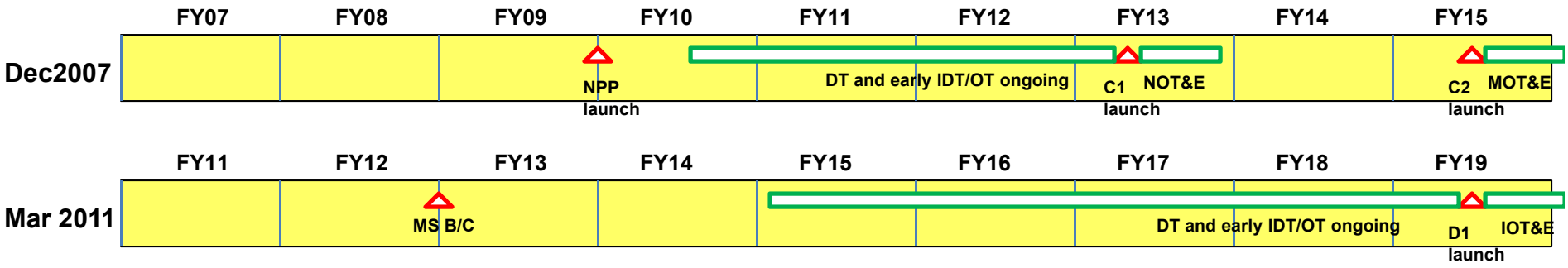

- **A large number of delays caused by issues discovered in contractor testing, primarily identifying performance shortfalls.**
  - 2003-2005: Production failures plague the visible-infrared imaging radiometer suite and the ozone sensor
    - Consumed 96% of program reserve by 2005
  - 2003-2007: Post 9/11 budget cuts
  - Other delays primarily due to management issues (several GAO reports on this).

- **NPOESS was granted a combined Key Decision Point B/C in 2002, with no provision for the remaining Build Approval Milestone, thus no Milestone proposed.**

- **In March 2010, the NPOESS program was split into DoD and non-DoD portions, with the DoD portion now designated as the Defense Weather Satellite System (DWSS), currently awaiting Material Development Decision.**

Proposed Test Event | Completed Test Event | Proposed Decision Point | Completed Decision Point

Global Command and Control System (GCCS) JOPES 4.2 and 4.2.1

Planning and Execution System for Joint Task Forces

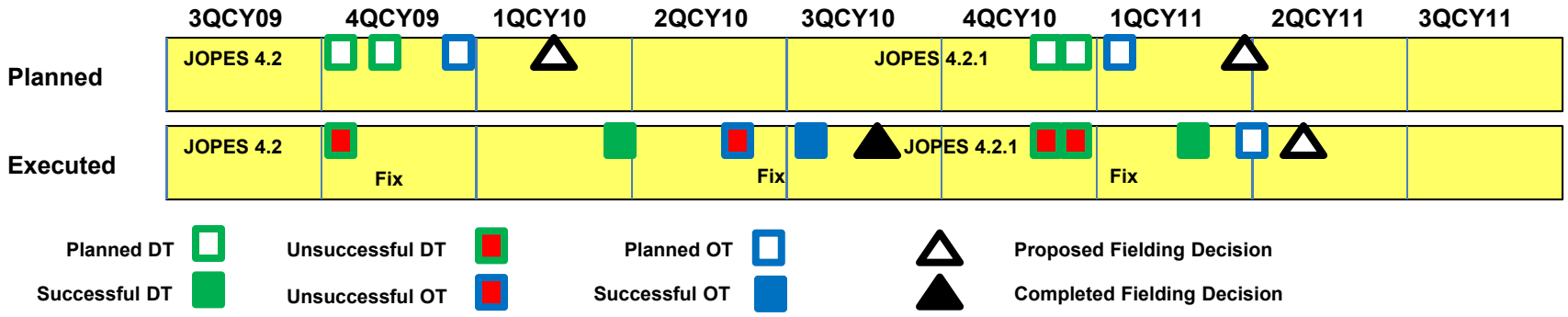

- JOPES 4.2 has been delayed many years and interim version 4.2.1 was delayed by 1 year due to testing deficiencies
- Joint Operations Planning and Execution System (JOPES) 4.2 and 4.2.1 were major software upgrades
- Initial 4.2 DT failure delayed planned second DT event with user participation
  - Significant fix period delayed second DT test event
- Failures in 4.2 OT required a fix period, followed by a re-test that was successful
  - Users accepted remaining software problems and recommended fielding

Combat Information Information Transport System (CITS)
Air Force Intranet (AFNet) Increment 1

A System to Provide a Centrally Managed Air Force Enterprise Network

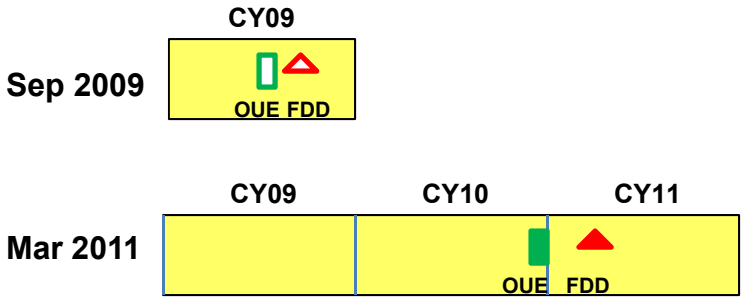

- In CY09, seven of 16 planned gateways were deployed for testing on Air Force unclassified operational networks. Testing deficiencies have delayed deployment by about 2 years
- Recurring deficiencies
  - Testing is done on 7 gateways but results need to be extrapolated to 16 gateways (scalability issue)
  - Some operational parameters were not met during developmental testing (e.g., 800 Mbps data throughput capability at gateway)
  - Challenge of *in situ* transition from 32-bit to 64-bit architecture
  - CITS program has many components such as Cyber Control System which are not funded at all and hence the overall effectiveness may not be achieved or tested
- Due to CY09 testing deficiencies, Operational Utility Evaluation was done in Dec 2010
- AFNet Inc 1 is operationally effective and operationally suitable, but with significant limitations, mostly related to Information Assurance and Cyber Defense
- Full Deployment Decision Review is planned in April 2011
  - Fielding decision will require Milestone Decision Authority to accept risks
  - PEO is proposing to reduce some requirements such as backup capability for 90 days, etc.

Proposed Test Event | Completed Test Event | Proposed Decision Point | Completed Decision Point

Outline

- Air Warfare Examples
- Naval Warfare Examples
- Land Warfare Examples
- Net-Centric Examples
- → Missile Defense Examples

Patriot Advanced Capability-3 (PAC-3) System

A System to Defend against Aircraft and Missile Attacks

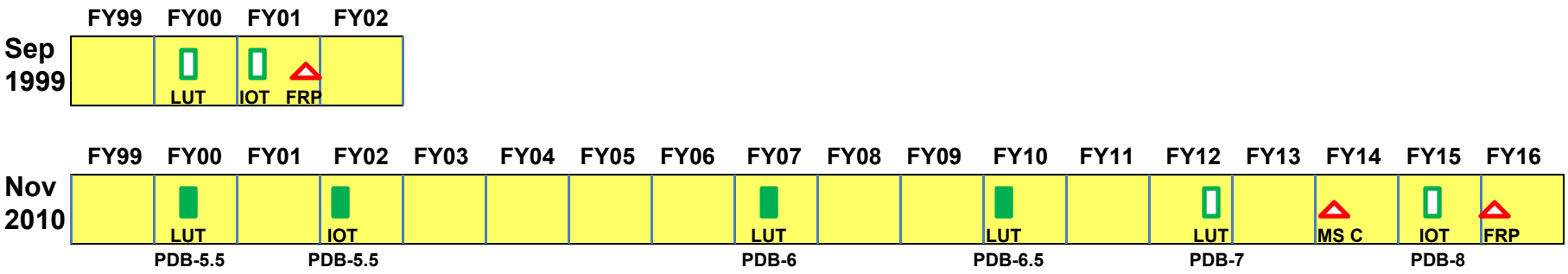

- **Patriot PAC-3 Full-Rate Production has been delayed by at least 15 years**
  - PAC-3 Configuration-3 IOT&E in 2002 revealed that Patriot did not meet all its Key Performance Parameter threshold requirements
  - The FRP decision was deferred and the program has made two-year missile purchases since then
  - Patriot showed good performance against simple Iraqi tactical ballistic missiles during Operation Iraqi Freedom in 2003 (as predicted by IOT&E), but Patriot units also shot down two friendly aircraft and killed three Allied airmen
  - The Army has modified Patriot system software to address problems revealed in IOT&E and OIF and has operationally tested each major system software drop (Post-Deployment Build or PDB) in Limited User Tests
  - The Army is developing the Missile Segment Enhancement (MSE) interceptor to address some of the problems Patriot has in meeting its KPP threshold requirements
  - The MSE LRIP decision is scheduled for FY14 and the FRP decision is scheduled for FY16 (after an FY15 IOT&E)
  - The FY16 FRP will be a system-level decision since the original PAC-3 Configuration-3 FRP was deferred
- **Patriot PAC-3 FRP has been deferred for both technical and programmatic reasons**
  - Patriot has not been able to meet all its KPP threshold requirements during operational testing
  - The Army has been able to purchase and field PAC-3 missiles using two-year buys without having to go to “full-rate production”

Proposed Test Event | Completed Test Event | Proposed Decision Point | Completed Decision Point

Medium Extended Air Defense System (MEADS)

A System to Defend against Aircraft and Missile Attacks

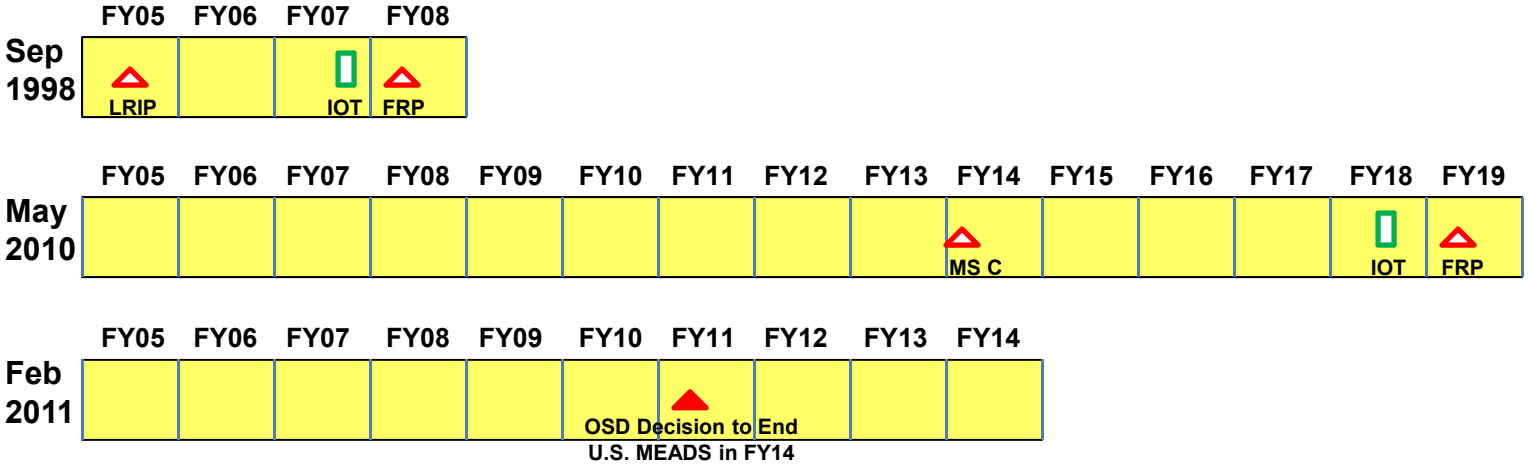

- **MEADS has experienced technical and management challenges since the 1990's**
  - MEADS is an international co-development program between the United States, Germany, and Italy
  - Some program delays were caused by the three nations shifting funding to later years
  - Most program delays were caused by technical problems in designing and developing the system
  - In November 2010, the NATO MEADS Management Agency indicated that the program was slipping another three years and would require an additional $1 billion of U.S. funding (on top of the $1.5 billion spent to date, the $800 million scheduled to be spent through 2014, and at least $800 million required to complete U.S.-unique development, integration, and testing)

- **In February 2011, OSD decided to end U.S. MEADS participation in FY14**
  - OSD plans to fund MEADS design and development until the current cost ceiling is reached
  - The United States does not intend to purchase MEADS

Proposed Test Event | Completed Test Event | Proposed Decision Point | Completed Decision Point

Conclusions

- Problems in conducting tests occasionally contributed to program delays, but problems found during both DT and OT testing frequently cause program delays
- Programmatic problems were also common